Automation for a Changing World

Delta IP55 Fan and Pump Drive CFP2000 Series

www.deltaww.com

DELTA

Smarter. Greener. Together.

CFP2000

Delta's CFP2000 series is an AC motor drive specially designed for HVAC, fans & pumps, and water treatment applications. It is designed with an IP55 enclosure to provide effective protection against water, dust, and other particles, and features outstanding functions to help users reduce setup / tuning time and enhance operation efficiency in applications. In addition, it includes many outstanding features and built-in functions that reduce setup and tuning time in operation and provide higher efficiency.

The CFP2000 is equipped with a built-in EMC filter and a DC choke. This design replaces the need for an electrical distribution cabinet and saves space for other devices, while providing the benefits of harmonic suppression and better power quality to the system. Various parameter groups are also included, which allow you to simply select the needed application in the parameter group setting and the system setup is ready. If a higher safety standard is required, an optional main switch function is also available upon selection. Other outstanding features include support for both IM/PM motors, real-time clock, built-in 10k steps PLC capacity and various optional extension cards.

The CFP2000 Series integrates all of your needs in one drive, and is your friendliest and smartest choice available in the industry!

Index

Highlights	3
Features	4
Operating Environment	7
Environment for Operation, Storage and Transportation	8
Specifications	9
General Specifications	10
Wiring	11
Dimensions	13
Accessories	28
Ordering Information	32
Model Name	32

Highlights

Standard Models

Power range: AC 380 to 480V/3 phase

kW	0.75	1.5	2.2	3.7	4	5.5	7.5	11	15	18.5	22	30	37	45	55	75	90
HP	1	2	3	5	5	7.5	10	15	20	25	30	40	50	60	75	100	125
Frame Size	A							B				C		D0		D	

Application

HVAC

Fans

Chiller

Water treatment

Features

▶ Motor Controls

IM motor

PM motor

▶ Overload Ability

Light duty:
120% for 60sec

Normal duty:
120% for 60sec
160% for 3sec

▶ I/O Terminals

- 10 MI
- 3 AI
- Optional I/O extension cards
- 2 AO
- 3 relay

▶ Built-in STO SIL2

▶ Mains Switch (Optional)

- Available for all IP55 models 0.75kW to 90kW
- Allows users to turn off the power easily during daily maintenance and does not require an additional breaker box

▶ LCD Keypad

- Quick setting for frequent use modes and facilitates the installation process
- Multi-row display, Intuitive operation, user friendly operation interface
- Parameter management and copy
- Real time clock
- Multi-language: English, Spanish, Portuguese, French, Russian, Turkish, Polish
- TP Editor for users to define the display on the screen of the keypad

Create homepage logo

Editable message display

▶ Built-in PLC Function

- Built-in 10 k steps PLC function supports independent and distributed control when connecting to a network system for high operation flexibility.
- Real Time Clock (RTC) function facilitates the PLC program writing process for ON/OFF chronology, daylight savings operation and many other settings.

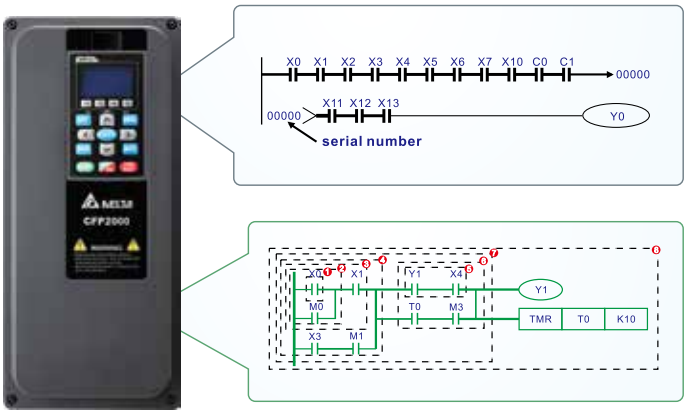

▶ Skip Frequency

- Skip Frequency function avoids motor vibration at a specific frequency band and protects the equipment. User can restrict up to 3 zones of frequency range

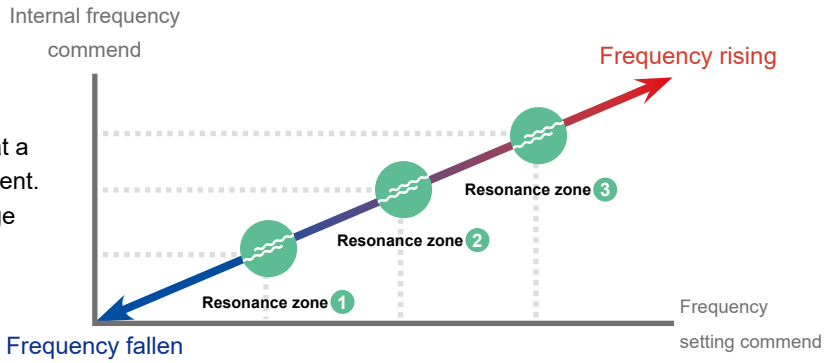

▶ Fire Mode

- Application: ventilation of buildings, tunnels, subways and more
- The drive will bypass the alarm warning in fire mode. When a fire occurs, it forces the drive to continue to operate to extract smoke or supplies water until the drive fails or runs out of emergency power
  - » Preset speed mode: set the drive to continue to operate under a preset speed
  - » BYPASS mode: the AC Mains Bypass breaker will bypass the drive and connect to the emergency power
  - » Fire mode with PID control: it balances the pressure between the stairwell and fire location to ensure the fire door can be easily opened

▶ Flying Start

- Ensures the drive runs smoothly under high inertial load without triggering the alarm, does not require the motor to stop
- When the drive restarts after momentary power loss (within 5s on LV), the speed searching allows the drive to activate flying start immediately and ensure a stable operation of the system without requiring the motor to fully stop in order to save time

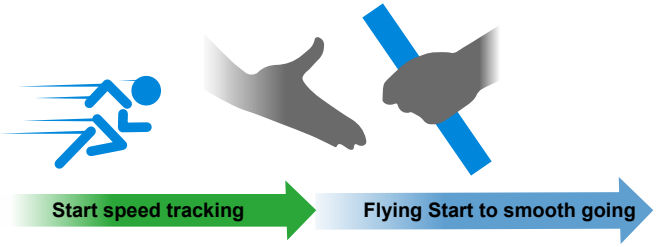

▶ Multi-pump Control

Built-in various modes for multi-pump control

- Fixed time circulation (by time)
- Fixed amount circulation (by PID)
- Fixed amount control (by PID)
- Fixed time circulation + fixed amount circulation
- Fixed time circulation + fixed amount control

Built-in 10k steps PLC function and RTC for user to program a time sequence control

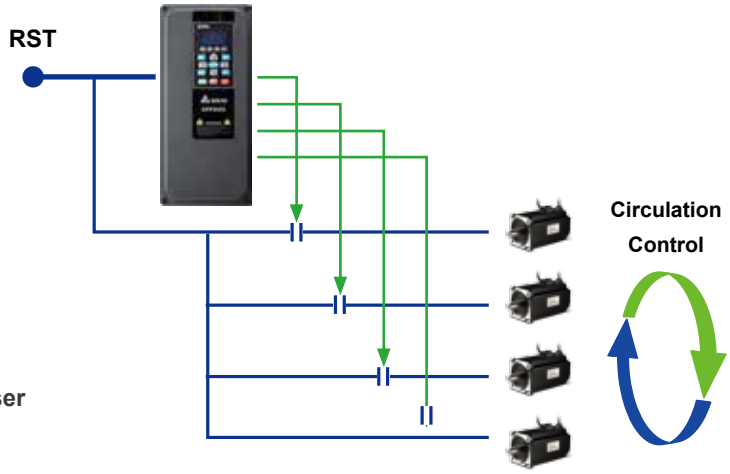

▶ Parameter Groups

Without parameter group…..

CFP2000 parameter group function simplifies the drive setting procedures. Various applications are provided:

01: User Defined

02: AHU

03: Fan

04: Pump

05: Compressor

▶ Advanced Networking

- Built-in RS-485 (Modbus)
- Built-in BACnet MS/TP
- Various communication card options

PROFINET, , EtherNet/IP, DeviceNet, Modbus TCP, CANopen (DS402)

Operating Environment

Enhanced PCB Coating

Standard:

IEC 60721-3-3 class 3C3

Protects PCB from gases such as salt, SO2, O3, H2S, and others to extend the product life when used in a water treatment application

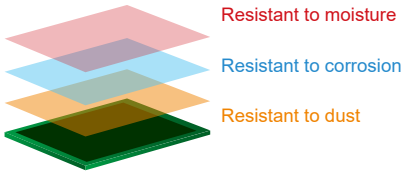

Protection Class

IP55 NEMA12, IP41 NEMA1

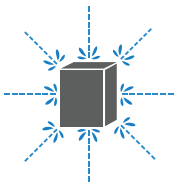

Water Resistant

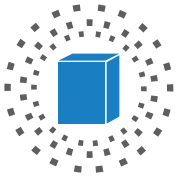

Dust Resistant

Operation Temperature

Up to **50 ºC** without derating
Up to **60 ºC** with derating

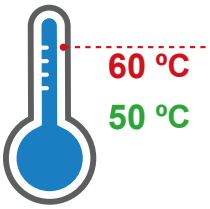

Built-in DC Choke

Suppress harmonics

THDi < 48%

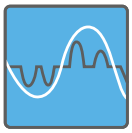

EN61000-3-12

Built EMC Filter

EN61800-3 C2 & C1*

***A zero phase reactor is required to fulfill EMC category C1**

Environment for Operation, Storage and Transportation

DO NOT expose the AC motor drive to harsh environments, such as dust, direct sunlight, corrosive/inflammable gasses, humidity, liquid or vibrations. The salts in the air must be less than 0.01 mg/cm^2 every year.

Ambient Conditions	Installation Location	IEC60364-1/IEC60664-1 Pollution degree 2, indoor use only	
	Surrounding Temperature (ºC)	Storage/Transportation	-25 ~ 70
		Only allowed at non-condensation, non-frost, non-conductive environment	
	Rated Humidity	Operation	Max. 95%
		Storage/Transportation	Max. 95%
		Only allowed at non-condensation, non-frost, non-conductive environment	
	Air Pressure (kPa)	Operation/Storage	86 ~ 106
		Transportation	70 ~ 106
	Environment	IEC60721-3-3	
		Operation	Class 3C3; Class 3S2
		Storage	Class 1C2; Class 1S2
		Transportation	Class 2C2; Class 2S2
	Altitude	Operation	If the AC motor drive is installed at an altitude 0 ~ 1,000 m, follow normal operation restrictions. For every 100 m increase in altitude, the AC motor drive needs to either lower rated current by 1% or by 0.5 ºC of temperature for operation.If the drive is installed at an altitude above 2,000 m, please refer to the voltage derating graph in the user manual for more instructions Note: Voltage derating is not needed for a Center Ground System, and maximum installation altitude is 4,000m.
	Vibration Operating	IEC 60068-2-6	
		Frame A: 2Hz ≦ f ≦ 13.2Hz/Amplitude 1mm; 13.2Hz < f ≦ 55Hz/Gravity 0.7G to 2.0G; 55Hz < f ≦ 512Hz/Gravity 2.0G Frame B: 2Hz ≦ f ≦ 13.2Hz/Amplitude 1mm; 13.2Hz < f ≦ 55Hz/Gravity 0.7G to 1.5G; 55Hz < f ≦ 512Hz/Gravity 1.5G Frame C/ D0/ D: 2Hz ≦ f ≦ 13.2Hz/Amplitude 1mm; 3.2Hz < f ≦ 55Hz/Gravity 0.7G to 1.0G; 155Hz < f ≦ 512Hz/Gravity 1.0G	
	Shock Operating	IEC 60068-2-27	
		Frame A; B; C; D0: Max. 30 G; 11 ms; Frame D: Max. 15 G; 11 ms	
In protective shipping package	Vibration	IEC 60068-2-64	
		10 Hz ≦ f ≦ 100 Hz/ASD: 1.0m2/s3; 100 Hz ≦ f ≦ 200 Hz/Slope: -3dB/octave	
	Shock	Cardboard box type: Free fall drop in accordance with ISTA 1A Wooden box type: In accordance with ISTA 1E (4 side incline) and ISTA 2B (Bottom side drop)	
Operation Position		Max. allowed offset angle ±10º (under normal installation position)	

Specifications for Operation Temperature and Protection Level

Model	Frame	Protection Level	OperationTemperature
VFDxxxFPxxx-52	Frame A ~ D: 0.75 ~ 90 kW	IP55/NEMA12	-10 °C ~ 50 °C*
VFDxxxFPxxx-41	Frame A ~ D: 0.75 ~ 90 kW	IP41/NEMA1	-10 °C ~ 50 °C*

*Note: 15ºC~50ºC, without derating; 51ºC~60ºC, with derating

Specifications

Frame Size			A							B				C		D0		D	
Models VFD-____FP4E-__			007	015	022	037	040	055	075	110	150	185	220	300	370	450	550	750	900
OUTPUT RATING	LIGHT DUTY	Rated Output Capacity (kVA)	2.4	3.3	4.4	6.8	8.4	10.4	14.3	19	25	30	36	48	58	73	88	120	143
		Rated Output Current (A)	3	4.2	5.5	8.5	10.5	13	18	24	32	38	45	60	73	91	110	150	180
		Applicable Motor Output (kW)	0.75	1.5	2.2	3.7	4.0	5.5	7.5	11	15	18.5	22	30	37	45	55	75	90
		Applicable Motor Output (HP)	1	2	3	5	5	7.5	10	15	20	25	30	40	50	60	75	100	125
		Overload Tolerance	120% for 60 seconds in every 5 minutes																
		Max. Output Frequency (Hz)	599																
		Carrier Frequency (kHz)	2~15 (default 6)										2~10 (default 6)						2~9 (default 6)
	NORMAL DUTY	Rated Output Capacity (kVA)	1.4	2.4	3.2	4.8	7.2	8.4	10	14	19	25	30	36	48	58	73	88	120
		Rated Output Current (A)	1.7	3.0	4.0	6.0	9.0	10.5	12	18	24	32	38	45	60	73	91	110	150
		Applicable Motor Output (kW)	0.4	0.75	1.5	2.2	3.7	4.0	5.5	7.5	11	15	18.5	22	30	37	45	55	75
		Applicable Motor Output (HP)	0.5	1	2	3	5	5	7.5	10	15	20	25	30	40	53	60	75	100
		Overload Tolerance	120% for 60 seconds in every 5 minutes 160% for 3 seconds in every 25 seconds																
		Max. Output Frequency (Hz)	599																
		Carrier Frequency (kHz)	2~15 (default 6)										2~10 (default 6)*1						2~9 (default 6)
INPUT RATING		Input Current (A) Light Duty	3.0	4.2	5.5	8.5	10.5	13	18	24	32	38	45	60	73	91	110	150	180
		Input Current (A) Normal Duty	1.7	3.0	4.0	6.0	9.0	10.5	12	18	24	32	38	45	60	73	91	110	150
		Rated Voltage/Frequency	3-phase AC 380V~480V (-15%~+10%), 50/60Hz																
		Operating Voltage Range	323~528 V_{AC}																
		Frequency Tolerance	47~63Hz																
Efficiency (%)			97																
Power factor			> 0.98																
Drive Weight (Kg)			6.8							14.5				26.5		42		59.5	
Cooling Method			Natural cooling		Fan cooling														
Braking Chopper			Frame A, B, C, Built-in																
DC Choke			Built-in DC choke meets EN6100-3-12																
EMC Filter			Built-in EMC filter meets EN61800-3 C2 & C1*2																

***1 The carrier frequency range of VFD900FP4EA-xx is 2~9kHz, default setting 6kHz**
***2 A zero phase reactor is required to fulfill EMC category C1**

NOTE

- **The value of the carrier frequency is a factory setting. To increase the carrier frequency, the current needs to be decreased. Please see derating curve diagram of Pr. 06-55 for more information.**
- **When a load is a surge load, use a higher level model.**

General Specifications

CONTROL CHARACTERISTICS	**Control Method**	Pulse Width Modulated (PWM)
	Control Mode	1: V/F (V/F control), 2: SVC (Sensorless Vector Control), 3: PMSVC
	Starting Torque	Reach up to 150% or above at 0.5Hz.
	V/F Curve	4 point adjustable V/F curve and square curve
	Speed Response Ability	5 Hz
	Torque Limit	Light Duty: Max. 130% torque current; Normal Duty: Max. 160% torque current
	Torque Accuracy	±5%
	Max. Output Frequency	599.00 Hz
	Frequency Output Accuracy	Digital command: ±0.01%, -10ºC~+40ºC; Analog command: ±0.1%, 25ºC±10ºC
	Output Frequency Resolution	Digital command: 0.01 Hz; Analog command: Max. output frequency x 0.03/60 Hz (±11-bit)
	Overload Tolerance	Normal duty: 120% of rated current can endure for1 minute during every 5 minutes 160% of rated current can endure for 3 seconds during every 30 seconds Light duty: 120% of rated current can endure for1 minute
	Frequency Setting Signal	0~+10 V, 4~20 mA, 0~20 mA, pulse input
	Accel./decel. Time	0.00~600.00/0.0~6000.0 seconds
	Main Control Function	Momentary power loss ride thru, Speed search, Over-torque detection, Torque limit, 16-step speed (max), Accel/decel time switch, S-curve accel/decel, 3-wire sequence, Auto-Tuning (rotational, stationary), Dwell, Slip compensation, Torque compensation, JOG frequency, Frequency upper/lower limit settings, DC injection braking at start/stop, High slip braking, PID control (with sleep function),Energy saving control, MODOBUS communication (RS-485 RJ45, max. 5.2 Kbps)
	Fan Control	VFD300FP4E and above are PWM control VFD220FP4E and below are on/off switch control
PROTECTION CHARACTERISTICS	**Motor Protection**	Electronic thermal relay protection
	Over-Current Protection	Light duty: Over-current protection for 200% rated current, Normal duty: Over-current protection for 240% rated current, Current clamp (Light duty: 130~135%) (Normal duty: 170~175%)
	Over-Voltage Protection	Drive will stop when DC-BUS voltage exceeds 820 V
	Over-Temperature Protection	Built-in temperature sensor
	Stall Prevention	Stall prevention during acceleration, deceleration and running independently
	Restart After Instantaneous Power Failure	Parameter setting up to 20 seconds
	Grounding Leakage Current Protection	Leakage current is higher than 50% of rated current of the AC motor drive
	Short-circuit Current Rating (SCCR)	Per UL508C, the drive is suitable for use on a circuit capable of delivering not more than 100 kA symmetrical amperes (rms) when protected by fuses given in the fuse table
International Certifications		CE, UL, GB/T12668-2

Wiring

Wiring Diagram for Frame A~C

*Input: 3-phase power

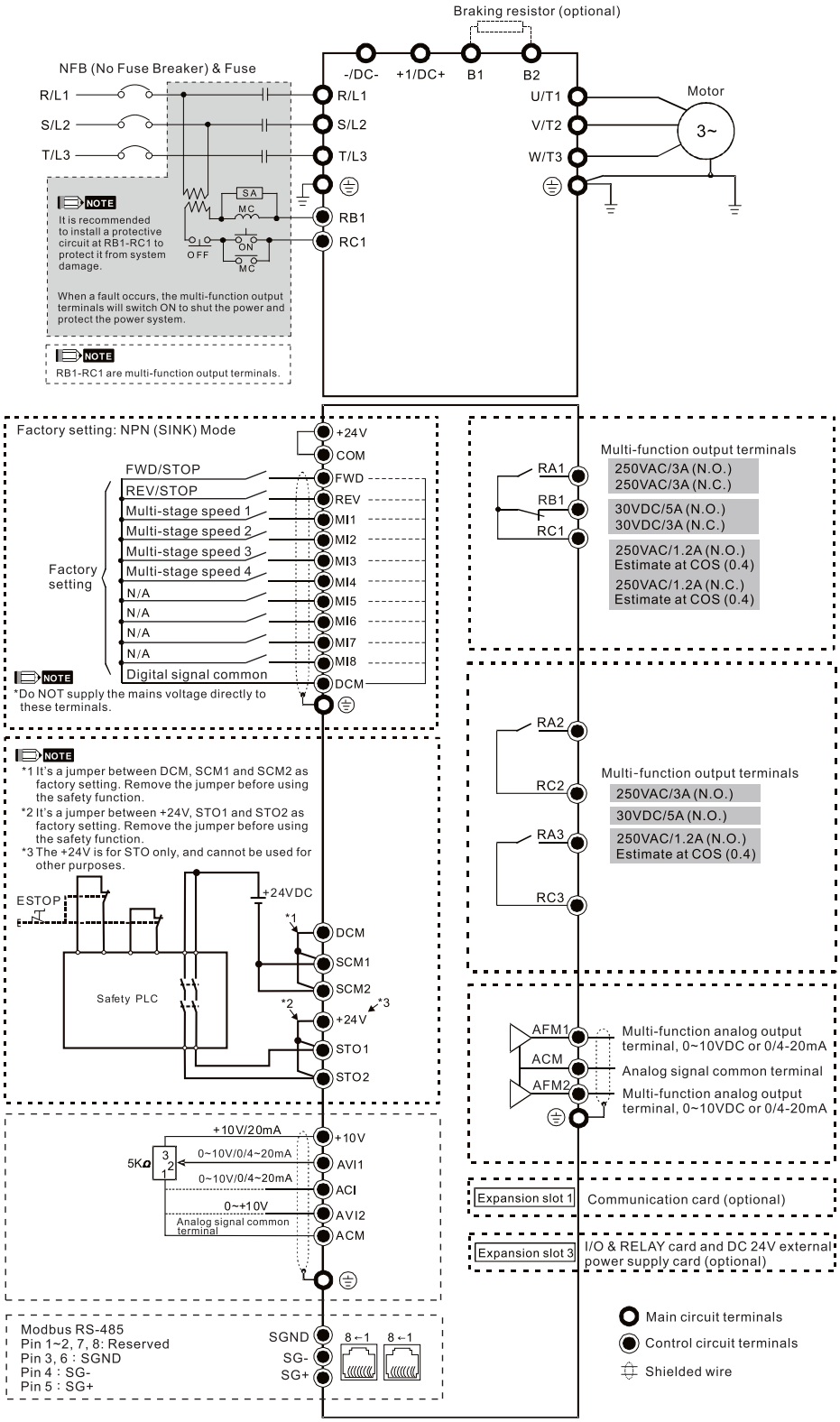

Wiring Diagram for Frame D0~D

*Input: 3-phase power

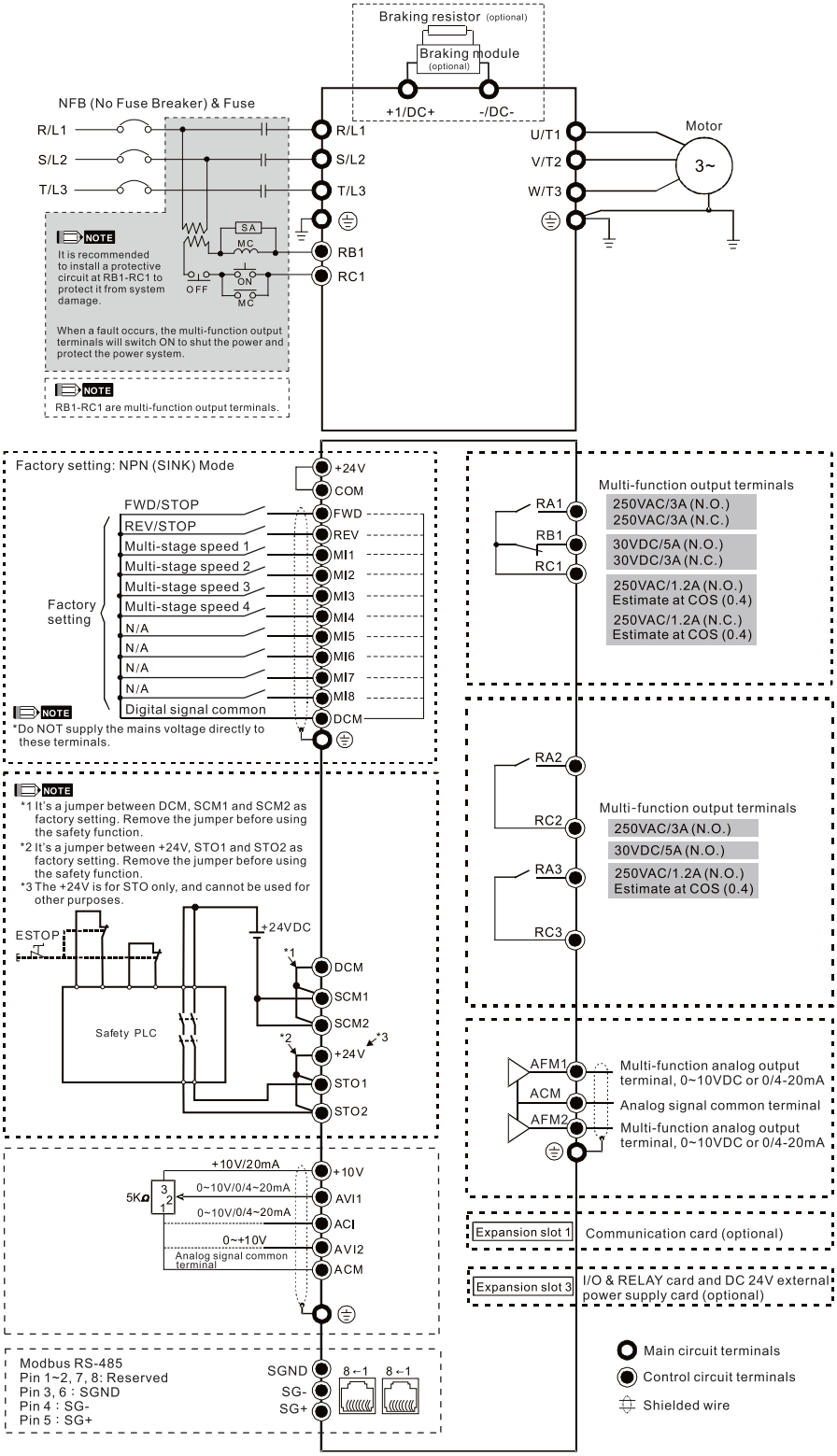

Dimensions

FRAME A (IP55)

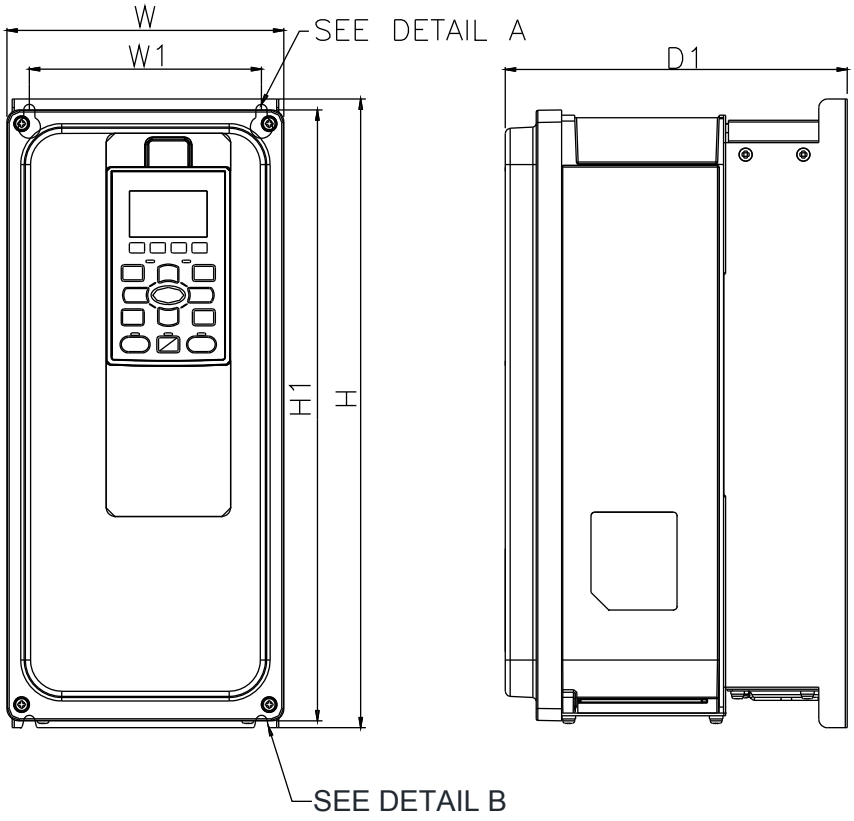

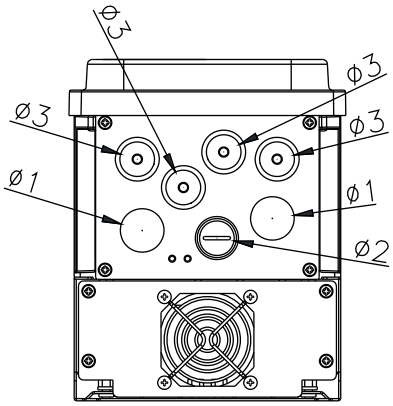

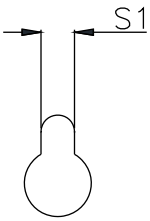

DETAIL A
(MOUNTING HOLE)

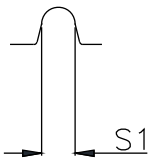

DETAIL B
(MOUNTING HOLE)

MODEL

FRAME A-1
VFD007FP4EA-52
VFD015FP4EA-52
VFD022FP4EA-52
VFD037FP4EA-52
VFD040FP4EA-52
VFD055FP4EA-52
VFD075FP4EA-52

FRAME		W	H	D	W1	H1	D1	S1	Ø1	Ø2	Ø3
A-1	mm	161.0	366.4	-	135.0	356.0	199.0	6.5	25.4	20.3	20.3
	inch	6.34	14.43	-	5.31	14.02	7.83	0.26	1.00	0.80	0.80

FRAME A (IP55)

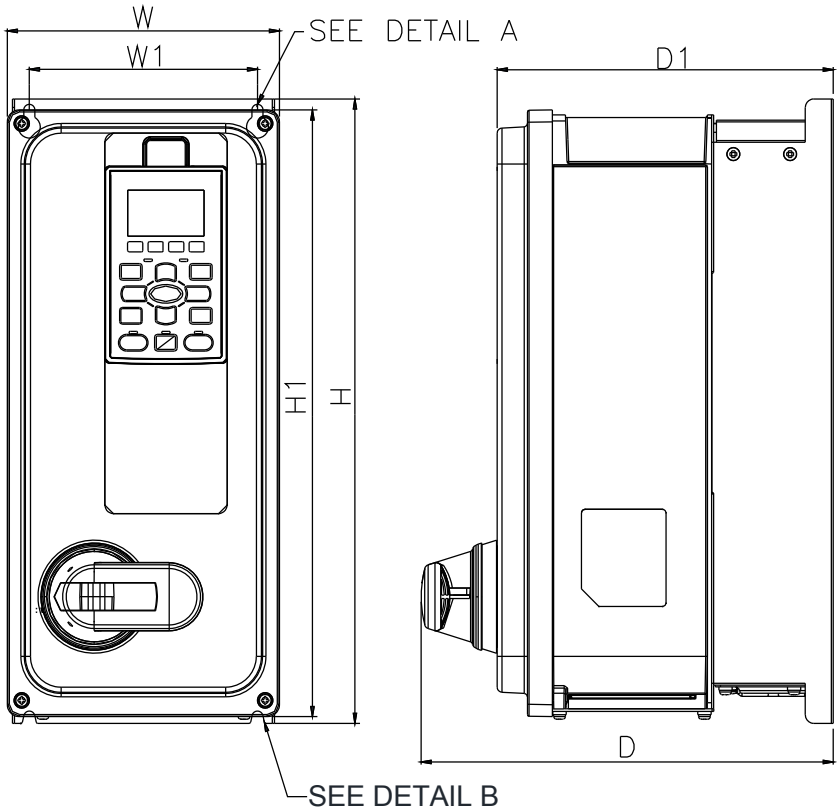

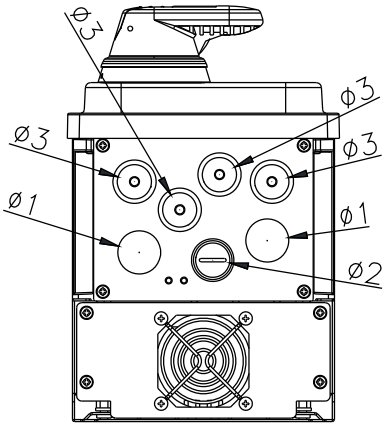

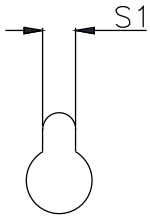

DETAIL A
(MOUNTING HOLE)

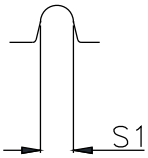

DETAIL B
(MOUNTING HOLE)

MODEL

FRAME A-2
VFD007FP4EA-52S
VFD015FP4EA-52S
VFD022FP4EA-52S
VFD037FP4EA-52S
VFD040FP4EA-52S
VFD055FP4EA-52S
VFD075FP4EA-52S

FRAME		W	H	D	W1	H1	D1	S1	Ø1	Ø2	Ø3
A-2	mm	161.0	366.4	244.0	135.0	356.0	199.0	6.5	25.4	20.3	20.3
	inch	6.34	14.43	9.61	5.31	14.02	7.83	0.26	1.00	0.80	0.80

FRAME A (IP41)

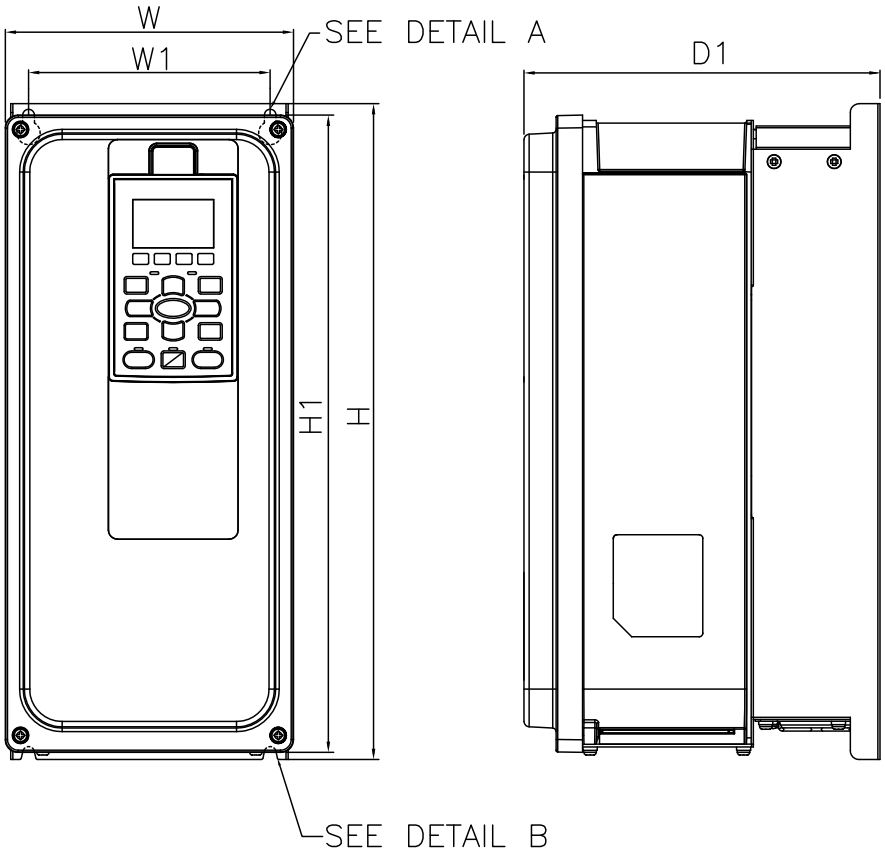

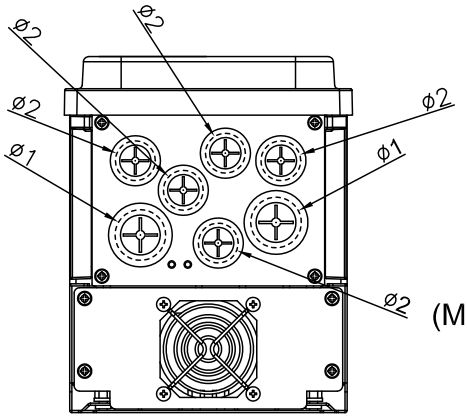

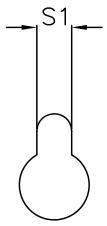

DETAIL A
(MOUNTING HOLE)

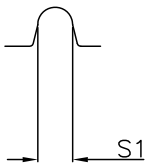

DETAIL B
(MOUNTING HOLE)

MODEL

FRAME A-3
VFD007FP4EA-41
VFD015FP4EA-41
VFD022FP4EA-41
VFD037FP4EA-41
VFD040FP4EA-41
VFD055FP4EA-41
VFD075FP4EA-41

FRAME		W	H	D	W1	H1	D1	S1	Ø1	Ø2
A-3	mm	161.0	366.4	-	135.0	356.0	199.0	6.5	28.0	22.0
	inch	6.34	14.43	-	5.31	14.02	7.83	0.26	1.10	0.87

FRAME B (IP55)

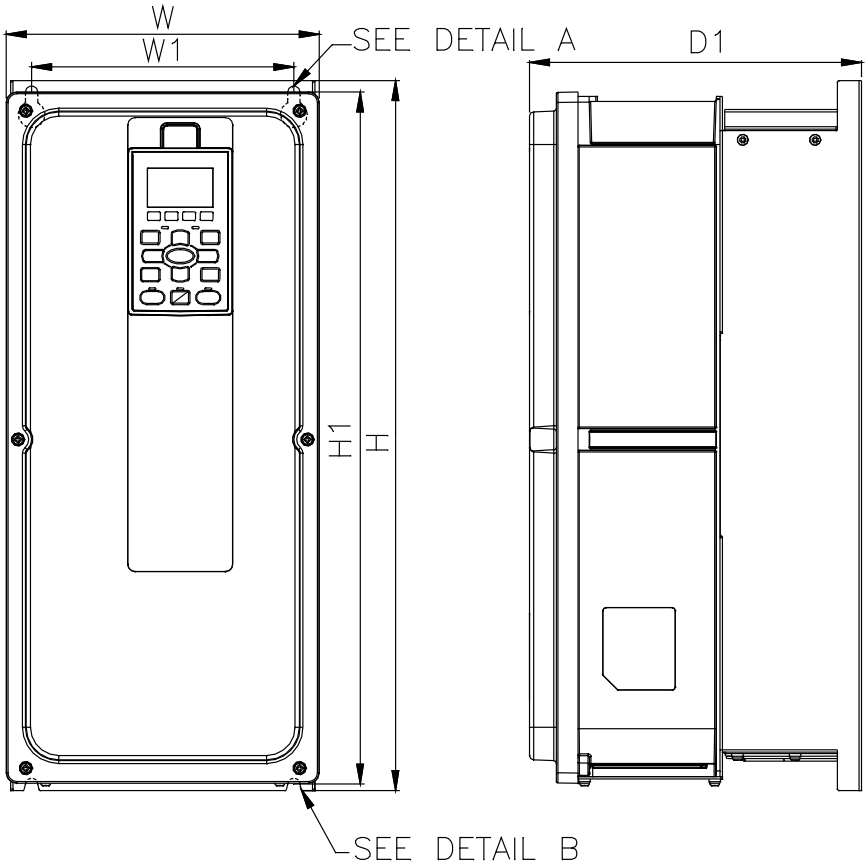

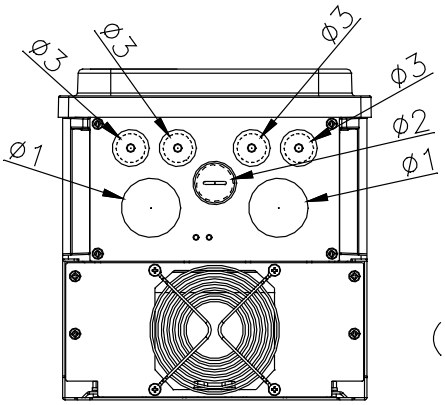

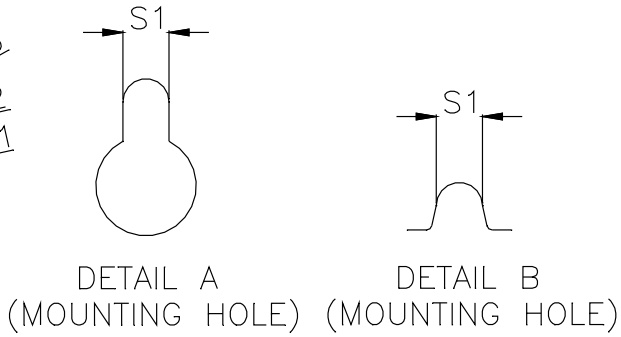

MODEL

FRAME B-1
VFD110FP4EA-52
VFD150FP4EA-52
VFD185FP4EA-52
VFD220FP4EA-52

FRAME		W	H	D	W1	H1	D1	S1	Ø1	Ø2	Ø3
B-1	mm	216.0	491.4	-	181.0	479.0	229.0	8.5	41.0	25.4	20.3
	inch	8.50	19.35	-	7.13	18.86	9.02	0.33	1.61	1.00	0.80

FRAME B (IP55)

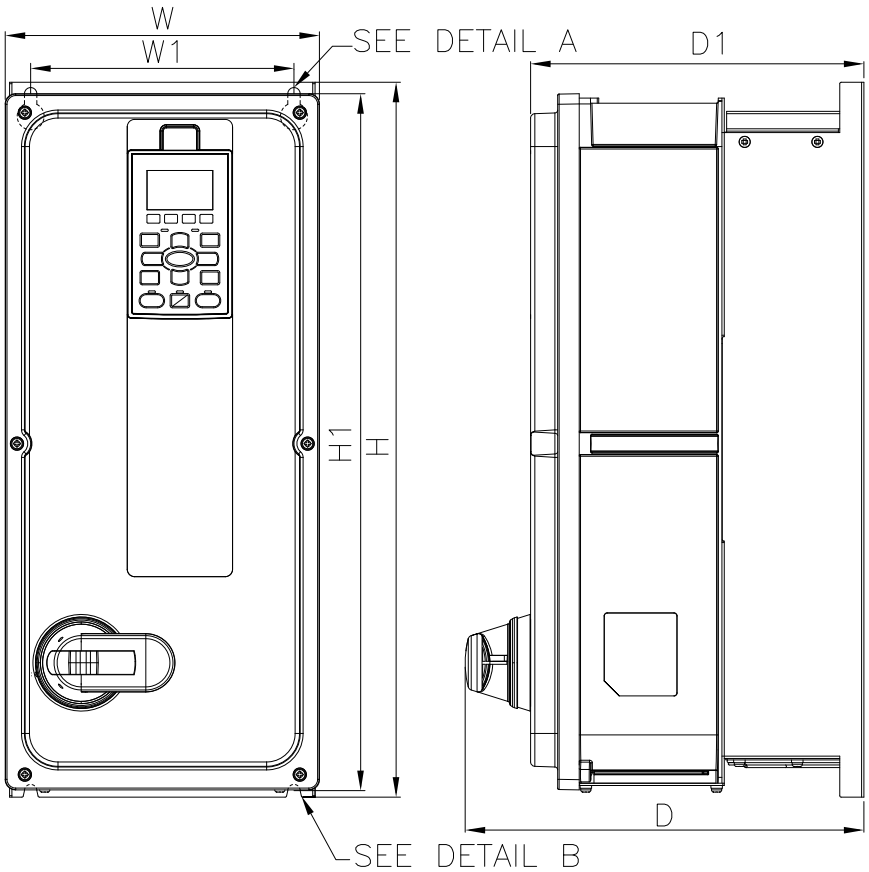

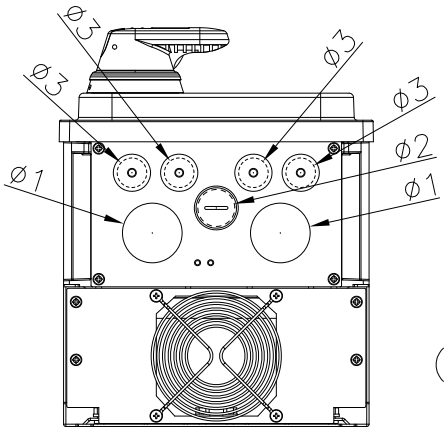

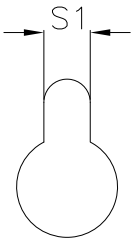

DETAIL A
(MOUNTING HOLE)

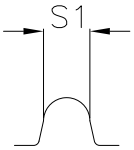

DETAIL B
(MOUNTING HOLE)

MODEL

FRAME B-2
VFD110FP4EA-52S
VFD150FP4EA-52S
VFD185FP4EA-52S
VFD220FP4EA-52S

FRAME		W	H	D	W1	H1	D1	S1	Ø1	Ø2	Ø3
B-2	mm	216.0	491.4	274.0	181.0	479.0	229.0	8.5	41.0	25.4	20.3
	inch	8.50	19.35	10.79	7.13	18.86	9.02	0.33	1.61	1.00	0.80

FRAME B (IP41)

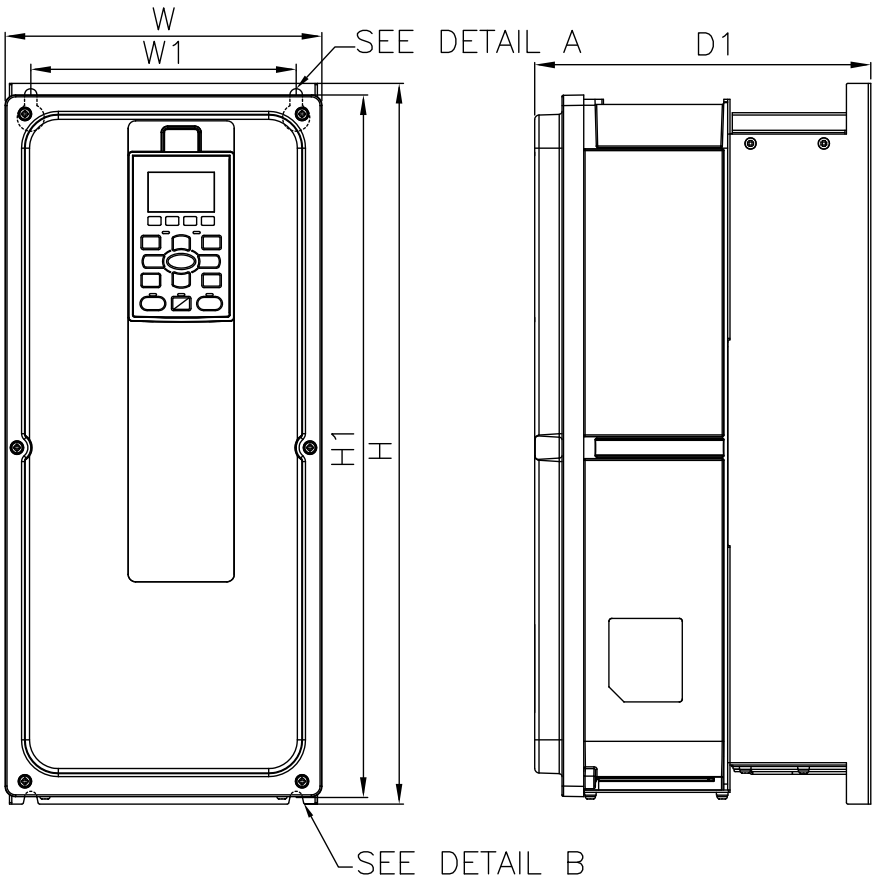

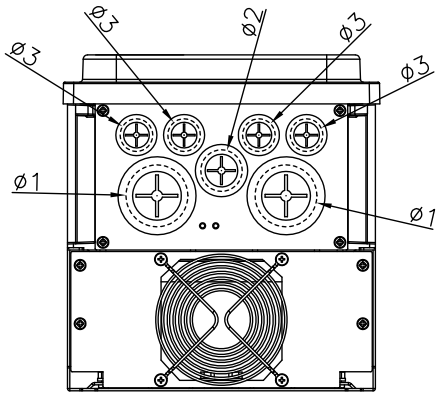

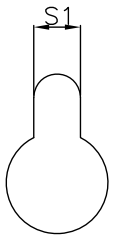

DETAIL A
(MOUNTING HOLE)

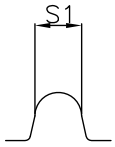

DETAIL B
(MOUNTING HOLE)

MODEL

FRAME B-3
VFD110FP4EA-41
VFD150FP4EA-41
VFD185FP4EA-41
VFD220FP4EA-41

FRAME		W	H	D	W1	H1	D1	S1	Ø1	Ø2	Ø3
B-3	mm	216.0	491.4	-	181.0	479.0	229.0	8.5	41.8	28.0	22.0
	inch	8.50	19.35	-	7.13	18.86	9.02	0.33	1.65	1.10	0.87

FRAME C (IP55)

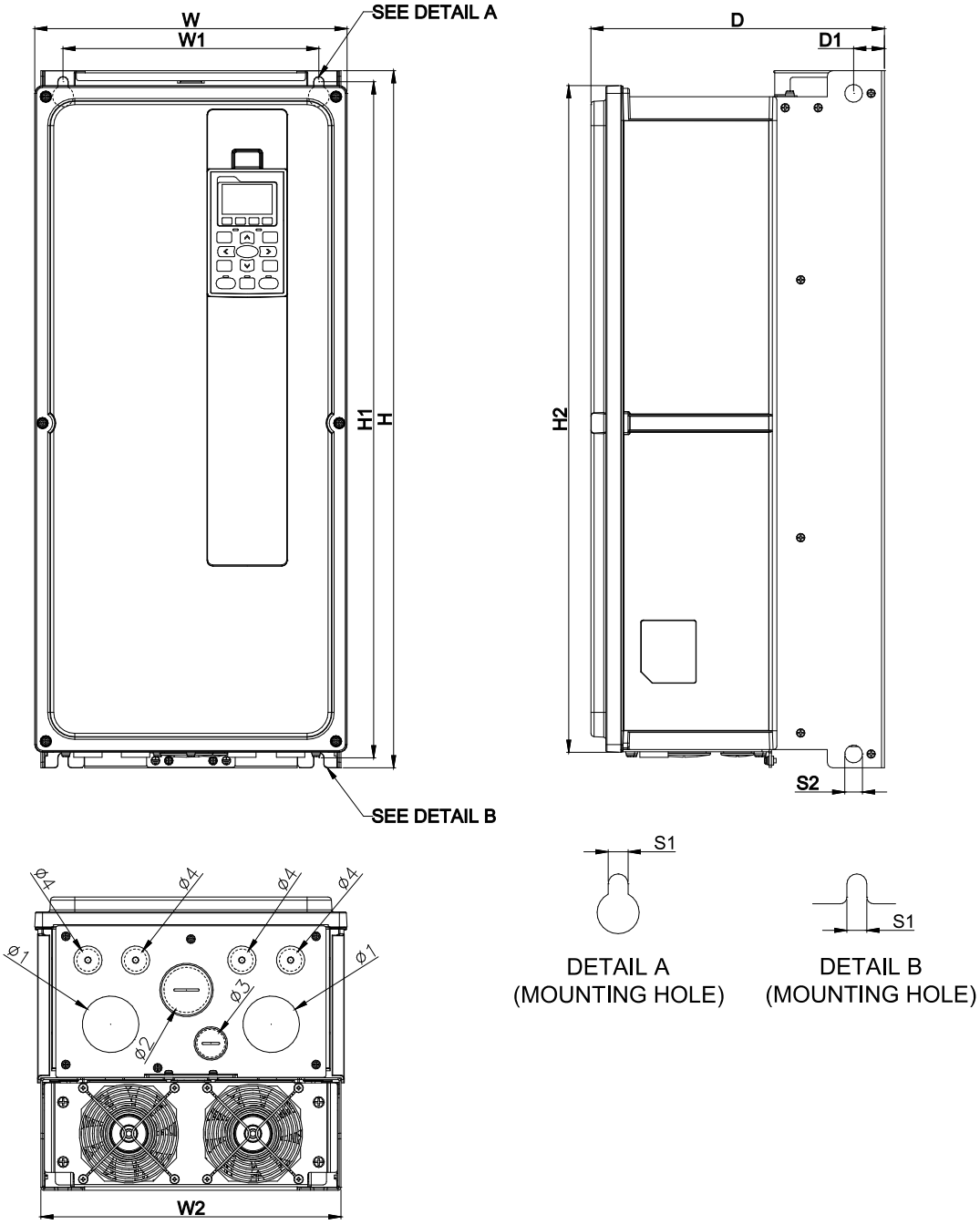

MODEL

FRAME C-1
VFD300FP4EA-52
VFD370FP4EA-52

FRAME		W	H	D	W1	H1	D1	S1	W2	H2	S2	Ø1	Ø2	Ø3	Ø4
C-1	mm	282.0	630.0	265.0	231.0	611.0	27.8	9.0	271.0	602.5	16.0	51.0	41.0	25.4	20.3
	inch	11.10	24.80	10.43	9.09	24.06	1.09	0.35	10.67	23.72	0.63	2.01	1.61	1.00	0.80

FRAME C (IP55)

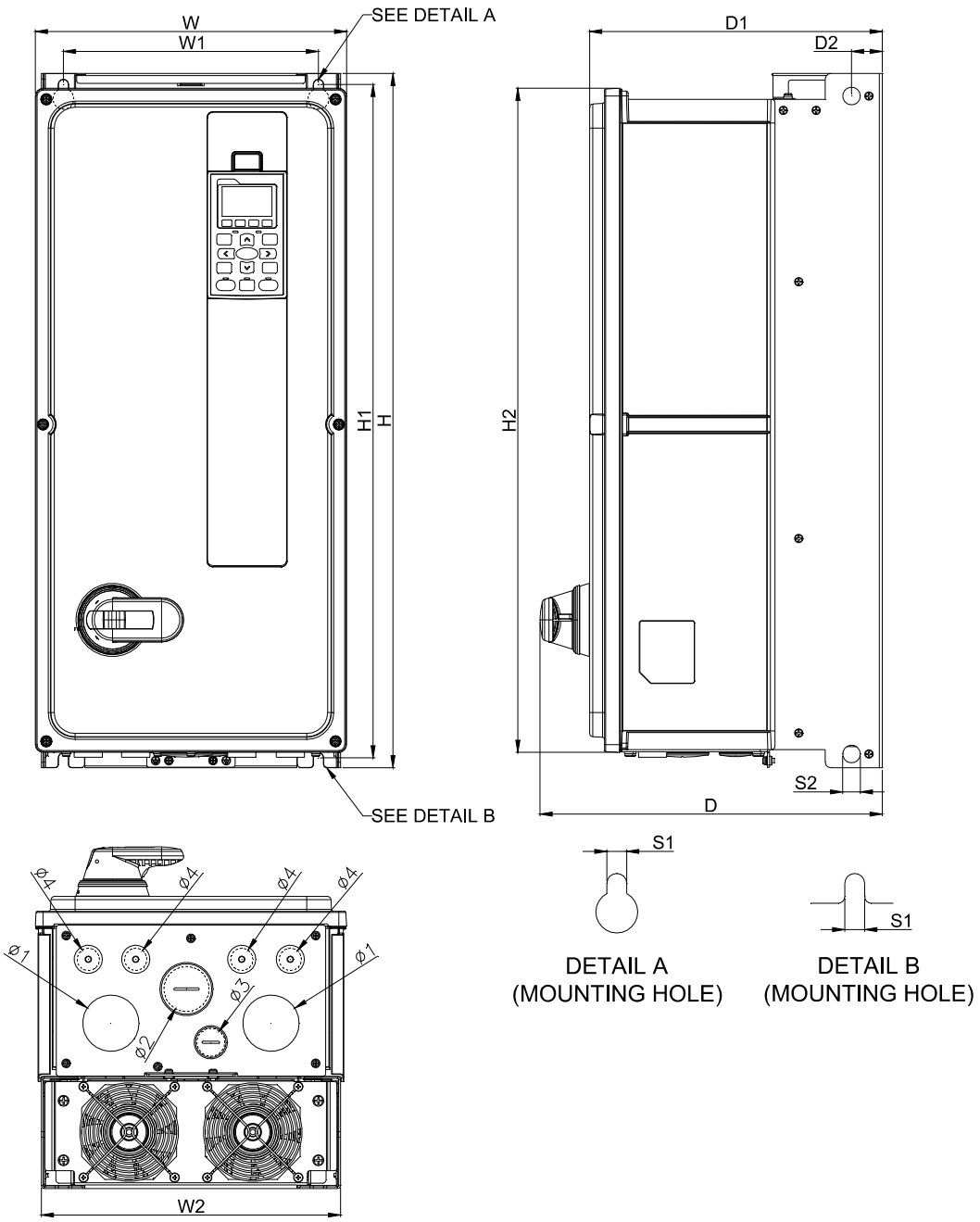

MODEL

FRAME C-2
VFD300FP4EA-52S
VFD370FP4EA-52S

FRAME		W	H	D	W1	H1	D1	S1	W2	H2	D2	S2	Ø1	Ø2	Ø3	Ø4
C-2	mm	282.0	630.0	310.0	231.0	611.0	265.0	9.0	271.0	602.5	27.8	16.0	51.0	41.0	25.4	20.3
	inch	11.10	24.80	12.20	9.09	24.06	10.43	0.35	10.67	23.72	1.09	0.63	2.01	1.61	1.00	0.80

FRAME C (IP41)

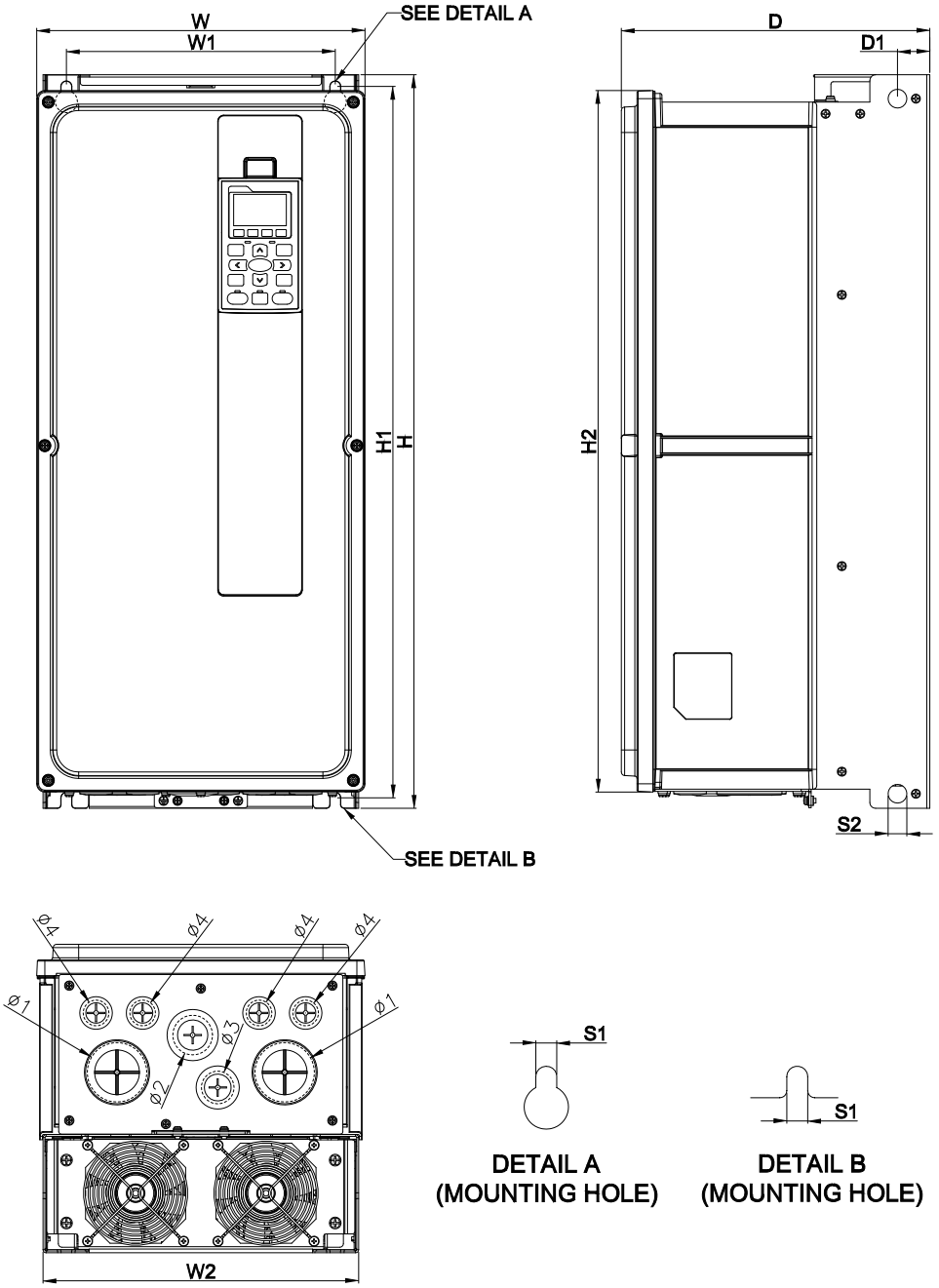

MODEL

FRAME C-3
VFD300FP4EA-41
VFD370FP4EA-41

FRAME		W	H	D	W1	H1	D1	S1	W2	H2	S2	Ø1	Ø2	Ø3	Ø4
C-3	mm	282.0	630.0	265.0	231.0	611.0	27.8	9.0	271.0	602.5	16.0	51.0	34.0	28.0	22.0
	inch	11.10	24.80	10.43	9.09	24.06	1.09	0.35	10.67	23.72	0.63	2.01	1.34	1.10	0.87

FRAME D0 (IP55)

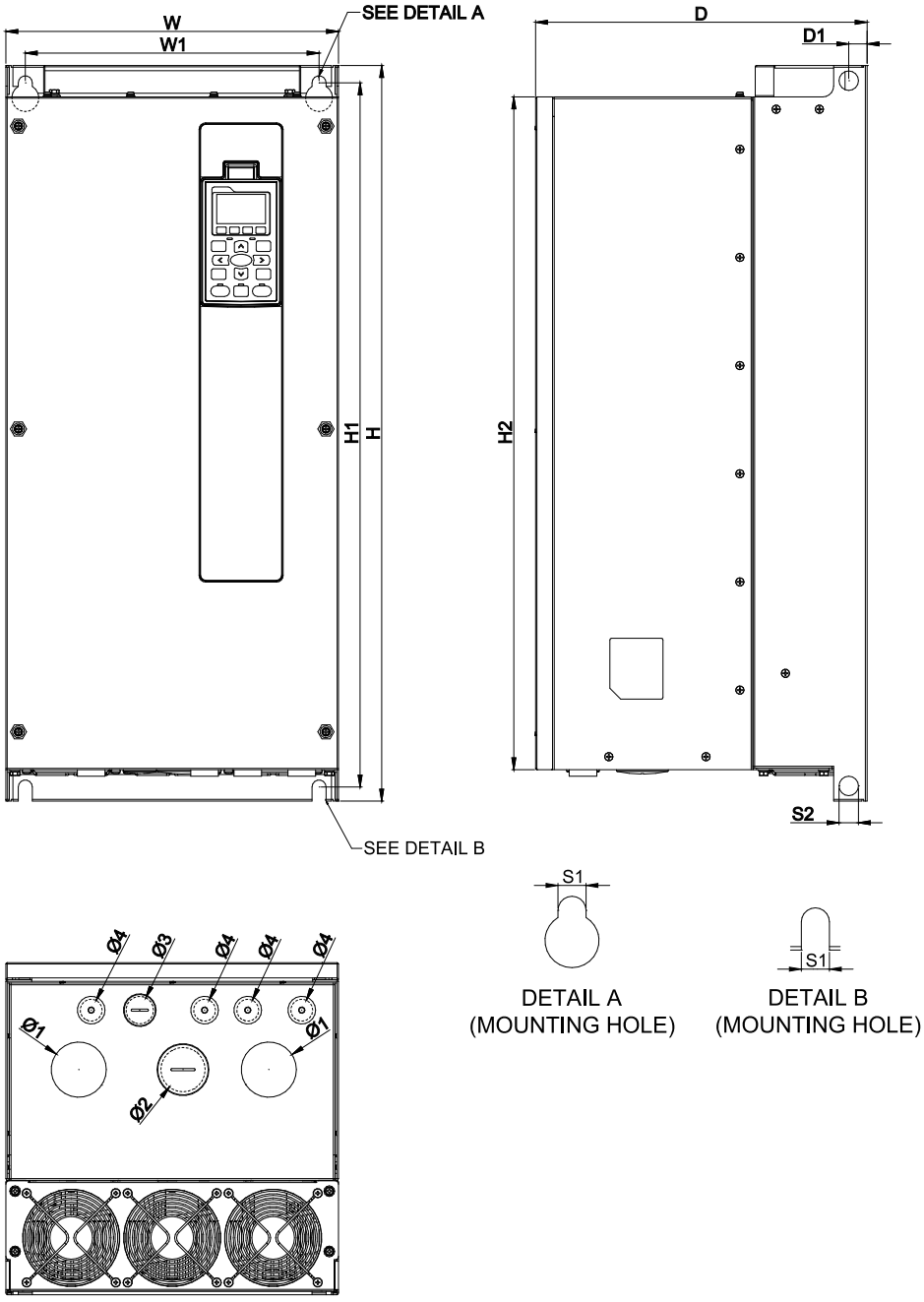

MODEL

FRAME D0-1
VFD450FP4EA-52
VFD550FP4EA-52

FRAME		W	H	D	W1	H1	D1	S1	H2	S2	Ø1	Ø2	Ø3	Ø4
D0-1	mm	308.0	680.0	307.0	272.0	651.0	17.0	13.0	622.0	18.0	51.0	41.0	25.4	20.3
	inch	12.13	26.77	12.09	10.71	25.63	0.67	0.51	24.49	0.71	2.01	1.61	1.00	0.80

FRAME D0 (IP55)

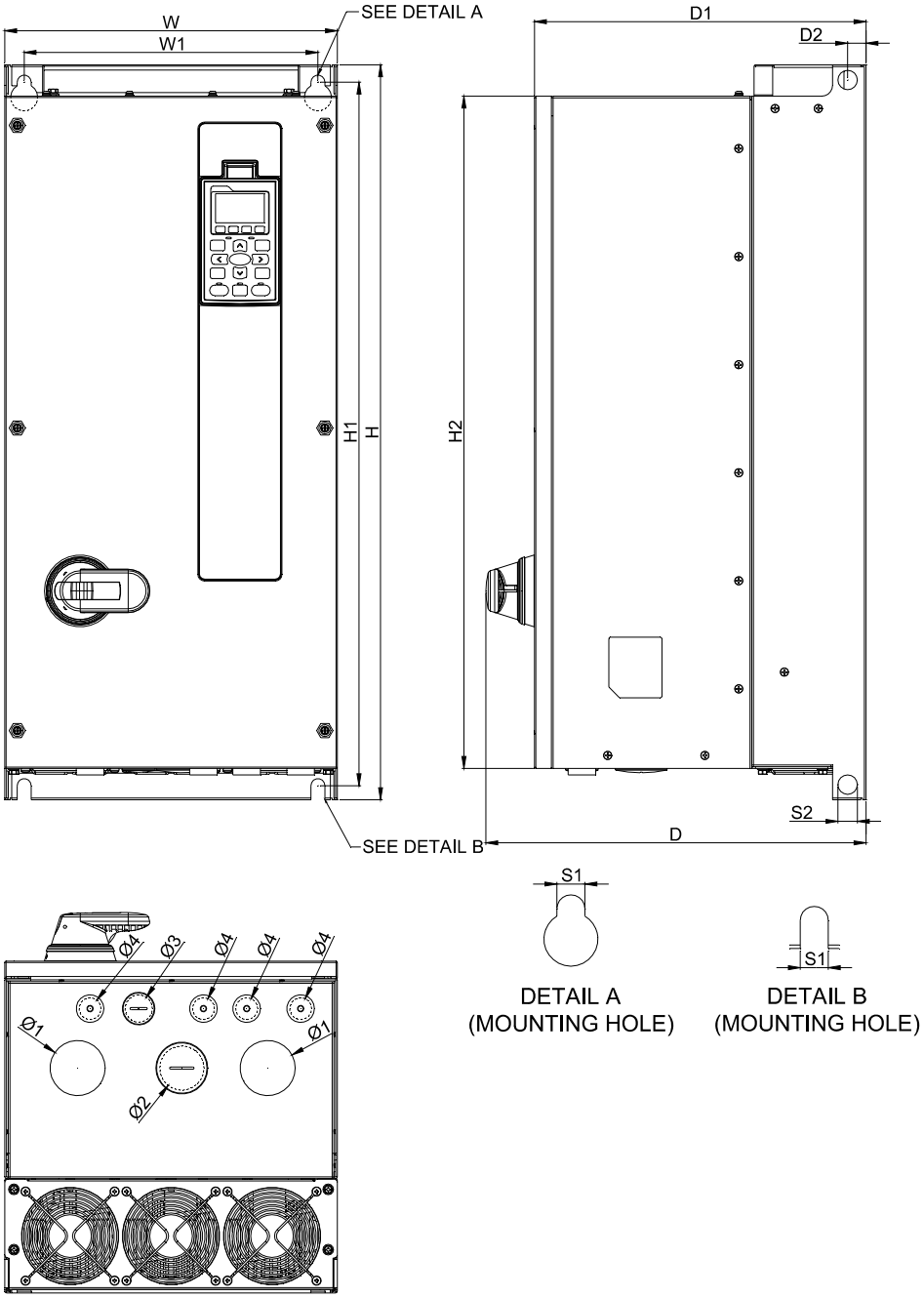

MODEL

FRAME D0-2
VFD450FP4EA-52S
VFD550FP4EA-52S

FRAME		W	H	D	W1	H1	D1	S1	H2	D2	S2	Ø1	Ø2	Ø3	Ø4
D0-2	mm	308.0	680.0	352.0	272.0	651.0	307.0	13.0	622.0	17.0	18.0	51.0	41.0	25.4	20.3
	inch	12.13	26.77	13.86	10.71	25.63	12.09	0.51	24.49	0.67	0.71	2.01	1.61	1.00	0.80

FRAME D0 (IP41)

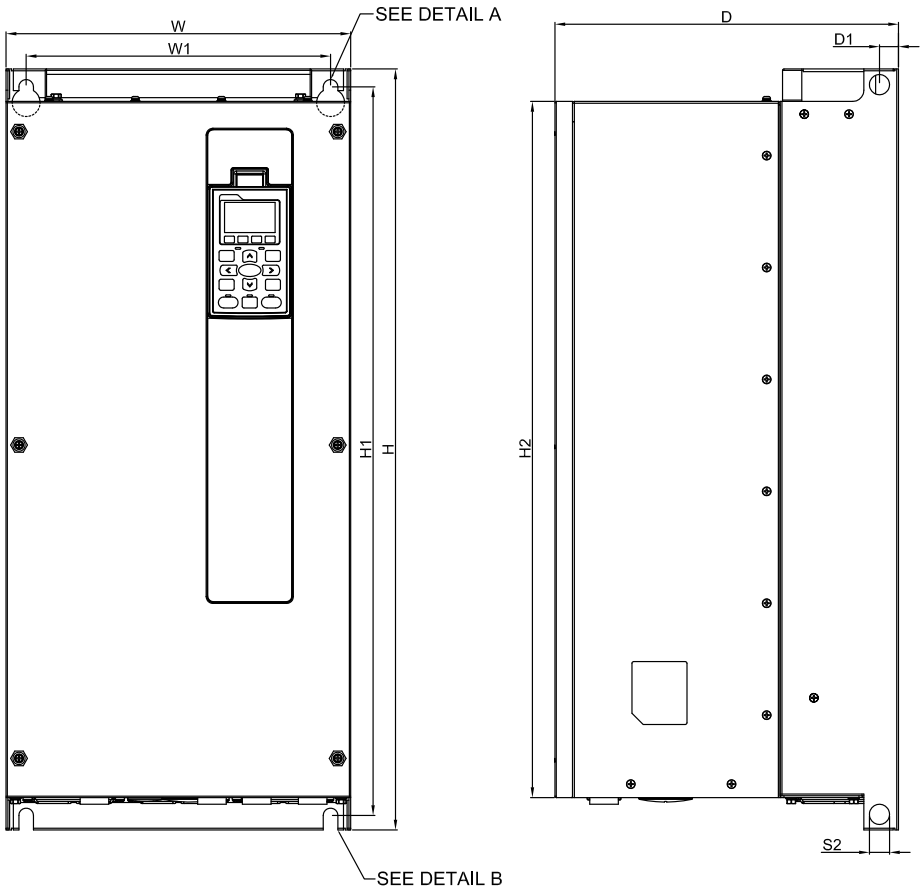

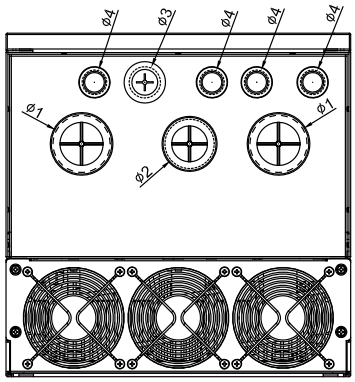

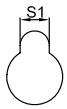

DETAIL A
(MOUNTING HOLE)

DETAIL B
(MOUNTING HOLE)

MODEL

FRAME D0-3
VFD450FP4EA-41
VFD550FP4EA-41

FRAME		W	H	D	W1	H1	D1	S1	H2	S2	Ø1	Ø2	Ø3	Ø4
D0-3	mm	308.0	680.0	307.0	272.0	651.0	17.0	13.0	622.0	18.0	51.0	44.0	28.0	22.0
	inch	12.13	26.77	12.09	10.71	25.63	0.67	0.51	24.49	0.71	2.01	1.73	1.10	0.87

FRAME D (IP55)

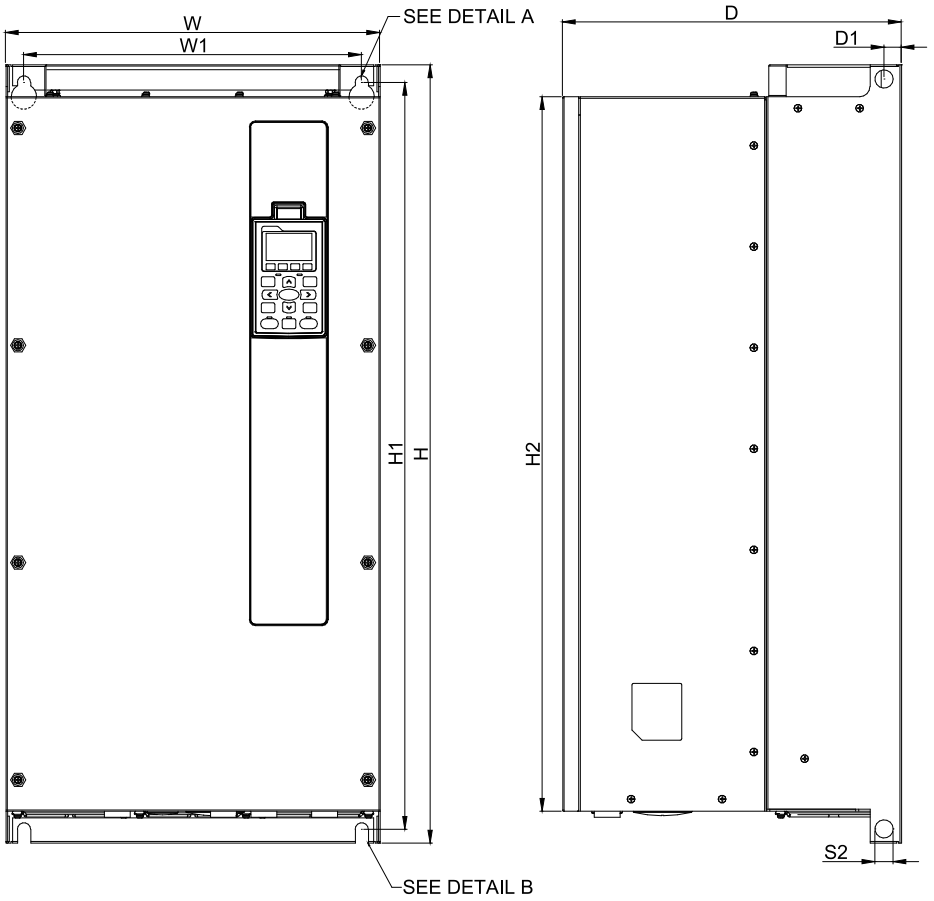

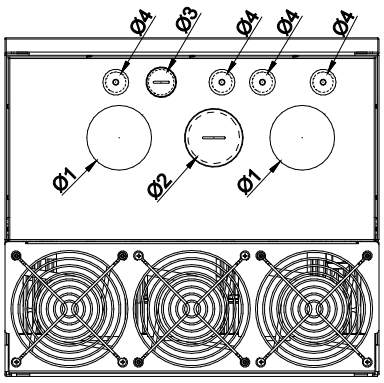

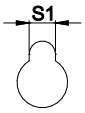

DETAIL A
(MOUNTING HOLE)

DETAIL B
(MOUNTING HOLE)

MODEL

FRAME D-1
VFD750FP4EA-52
VFD900FP4EA-52

FRAME		W	H	D	W1	H1	D1	S1	H2	S2	Ø1	Ø2	Ø3	Ø4
D-1	mm	370.0	770.0	335.0	334.0	739.0	17.0	13.0	707.0	18.0	64.0	51.0	25.4	20.3
	inch	14.57	30.31	13.19	13.15	29.09	0.67	0.51	27.83	0.71	2.52	2.01	1.00	0.80

FRAME D (IP55)

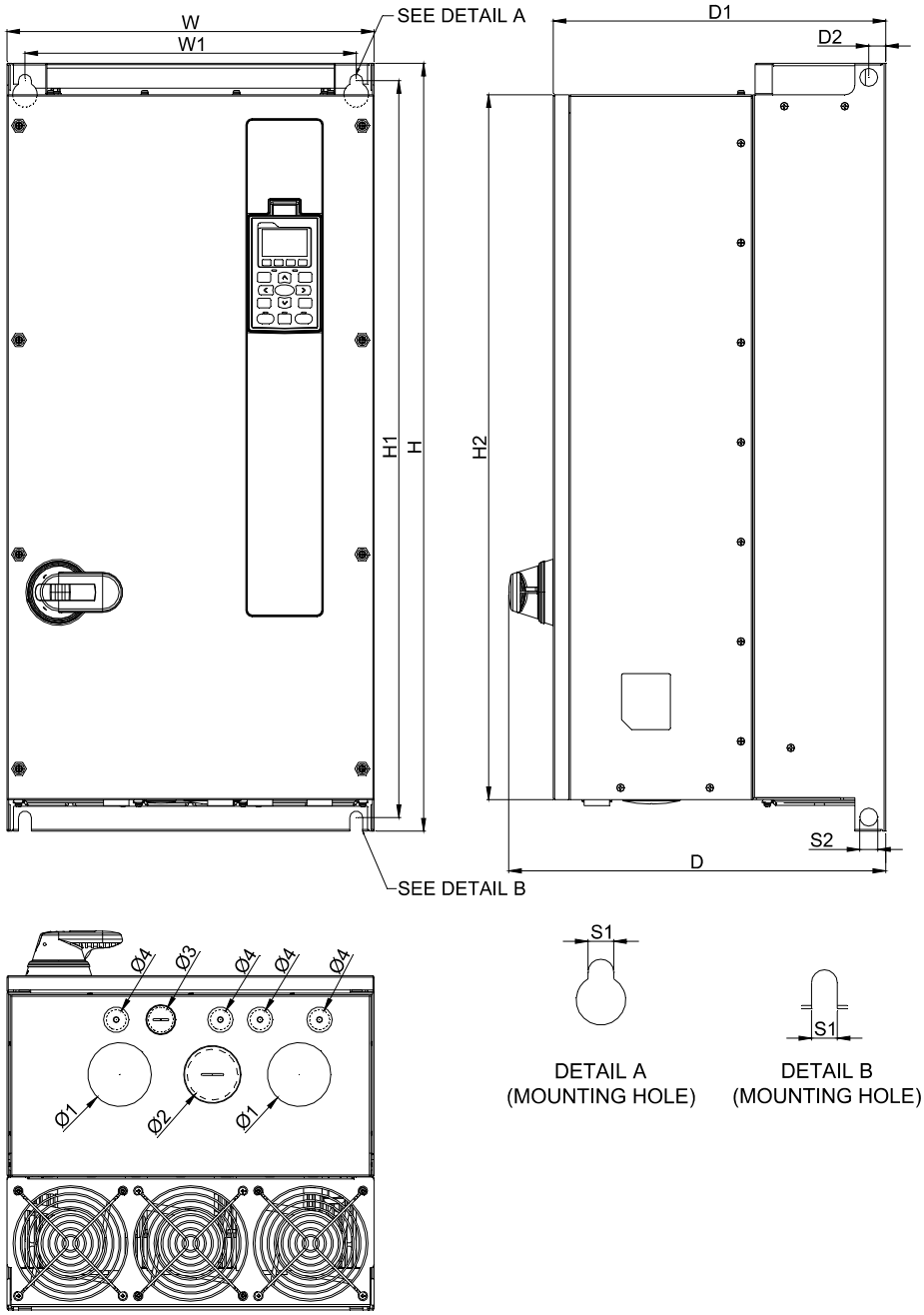

MODEL

FRAME D-2
VFD750FP4EA-52S
VFD900FP4EA-52S

FRAME		W	H	D	W1	H1	D1	S1	H2	D2	S2	Ø1	Ø2	Ø3	Ø4
D-2	mm	370.0	770.0	380.0	334.0	739.0	335.0	13.0	707.0	17.0	18.0	64.0	51.0	25.4	20.3
	inch	14.57	30.31	14.96	13.15	29.09	13.19	0.51	27.83	0.67	0.71	2.52	2.01	1.00	0.80

FRAME D (IP41)

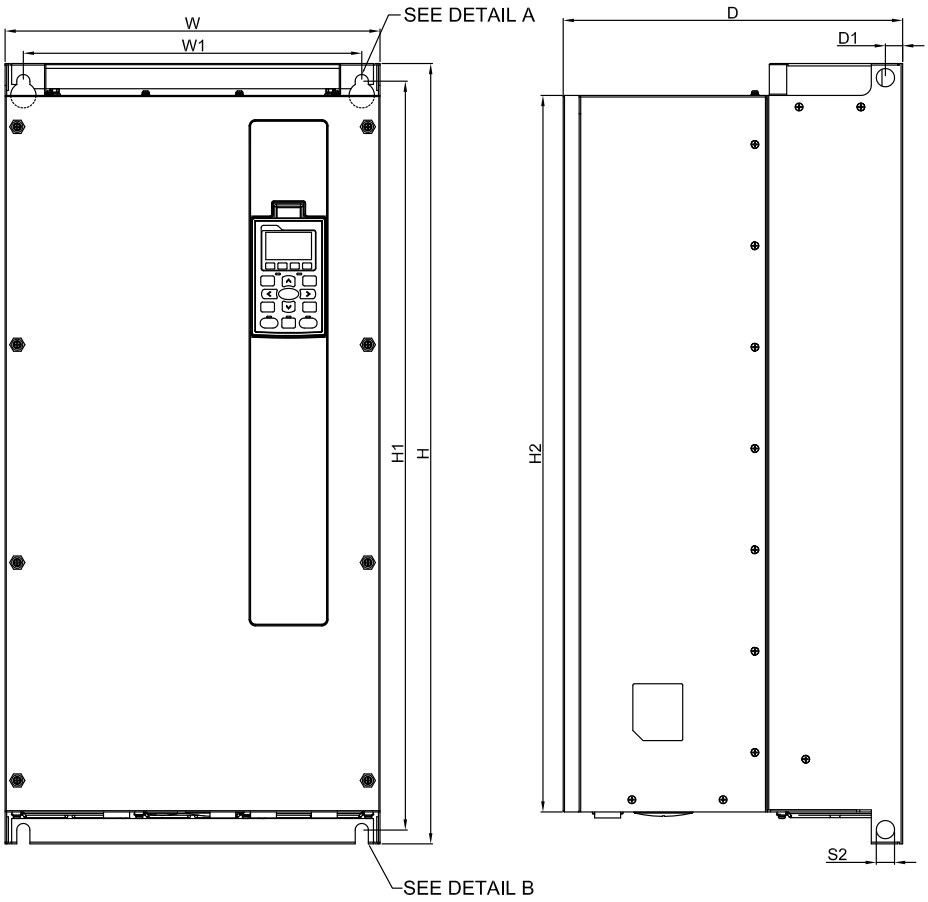

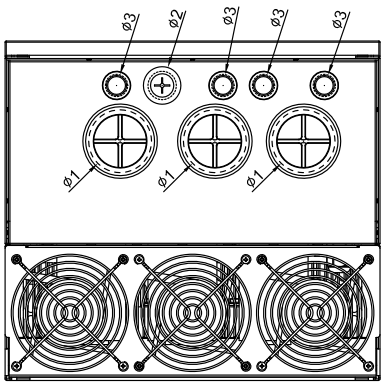

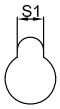

DETAIL A
(MOUNTING HOLE)

DETAIL B
(MOUNTING HOLE)

MODEL

FRAME D-3
VFD750FP4EA-41
VFD900FP4EA-41

FRAME		W	H	D	W1	H1	D1	S1	H2	S2	Ø1	Ø2	Ø3
D-3	mm	370.0	770.0	335.0	334.0	739.0	17.0	13.0	707.0	18.0	62.0	28.0	22.0
	inch	14.57	30.31	13.19	13.15	29.09	0.67	0.51	27.83	0.71	2.44	1.10	0.87

Accessories

Relay Extension Card

- **EMC-R6AA**

Terminals	Descriptions
RA10~RA15 RC10~RC15	Refer to Pr. 02-36~Pr. 02-41 for multi-function output selection Resistive load: 3A (N.O.)/250 V_{AC} 5A (N.O.)/30 V_{DC} Inductive load (COS 0.4) 2.0A (N.O.)/250 V_{AC} 2.0A (N.O.)/30 V_{DC} It is used to output each monitor signal, such as for drive in operation, frequency attained or overload indication.

Analog I/O Extension Card

- **EMC-A22A**

Terminals	Description
AVI10 AVI11	Refer to Pr. 14-00~Pr. 14-01 for function selection (input), and Pr. 14-18~Pr. 14-19 for mode selection Two sets of AVI port for AVI or ACI switch: SSW3 (AVI10) and SSW4 (AVI11) AVI: Input 0~10V ACI: Input 0~20mA/4~20mA
AFM10 AFM11	Refer to Pr. 14-12~Pr. 14-13 for function selection (output), and Pr. 14-36~Pr. 14-37 for mode selection Two sets of AFM port for AVO or ACO switch: SSW1 (AFM10) and SSW2 (AFM11) AVO: Output 0~10.00V ACO: Output 0~20.0mA/4.0~20.0mA
ACM	Analog signal common terminal

I/O Extension Card

- **EMC-D611A**

Terminals	Descriptions
AC	AC power common for multi-function input terminal (Neutral)
MI10~MI15	Refer to Pr. 02-26~Pr. 02-31 for multi-function input selection Input voltage: 100~130 V_{AC}; Input frequency: 57~63Hz Input impedance: 27KΩ Terminal response time: ON: 10ms; OFF: 20ms

I/O Extension Card

- **EMC-D42A**

Terminals	Descriptions
COM	Common for multi-function input terminals Select SINK (NPN)/SOURCE (PNP) in J1 jumper/external power supply
MI10~MI13	Refer to Pr. 02-26~Pr. 02-29 to program the multi-function inputs MI10~MI13 Internal power is applied from terminal E24: +24 V_{DC} ± 5% 200mA, 5W External power +24 V_{DC}: max. voltage 30 V_{DC}, min. voltage 19 V_{DC}, 30W ON: the activation current is 6.5mA; OFF: leakage current tolerance is 10μA
MO10~MO11	Multi-function output terminals (photocoupler) Duty-cycle: 50%; Max. output frequency: 100Hz Max. current: 50mA; Max. voltage: 48 V_{DC}
MXM	Common for multi-function output terminals MO10, MO11 (photocoupler) Max. 48 V_{DC} 50mA

Accessories

24 V Power Shift Card

▪ EMC-BPS01

Terminals	Descriptions
24 V GND	Allows operation of network system, PLC function and partial functions when the AC motor drive is power off Input power: 24 VDC ± 5% Maximum input current: 0.5A Note: Do not connect the control terminal +24 V (Digital control signal common: SOURCE) directly to the EMC-BPS01 input terminal 24 V. Do not connect control terminal GND directly to the EMC-BPS01 input terminal GND.

CANopen Card

▪ EMC-COP01

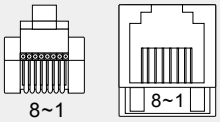

RJ-45 Pin	Pin name	Definition
1	CAN_H	CAN_H bus line (dominant high)
2	CAN_L	CAN_L bus line (dominant low)
3	CAN_GND	Ground/0 V/V-
6	CAN_GND	Ground/0 V/V-

EtherNet/IP, Modbus TCP Card

▪ CMC-EIP01

Features

- Support EtherNet/IP and Modbus TCP protocol
- User-defined parameter mapping
- IP Filter, basic firewall function

Network Interface

Interface	RJ-45 with Auto MDI/MDIX	**Transmission Cable**	Category 5e shielding 100 M
Number of Ports	1 Port	**Transmission Speed**	10/100 Mbps Auto-Detect
Transmission Method	IEEE 802.3, IEEE 802.3u	**Network Protocol**	ICMP, IP, TCP, UDP, DHCP, BOOTP, SMTP, EtherNet/IP, Modbus TCP

PROFINET Card

▪ CMC-PN01 NEW

Features

- Supports PROFINET IO device
- Supports synchronous data transmission and synchronous parameter access
- Provides GSDML file for PROFINET communication

Network Interface

Interface	RJ-45	**Transmission Cable**	Category 5e shielding 100M
Number of Ports	2 Ports	**Transmission Speed**	10/100 Mbps auto-negotiate
Transmission Method	IEEE 802.3	**Network Protocol**	PROFINET

PROFIBUS DP Card

▪ CMC-PD01

Features

- Supports PZD control data exchange
- Supports PKW polling AC motor drive parameters
- Supports user diagnosis function
- Supports remote I/O function
- Baud (auto-detection): max. 12 Mbps

PROFIBUS DP Connector

Interface	DB9 connector
Transmission Method	High-speed RS-485
Transmission Cable	Shielded twisted pair cable
Electrical Isolation	500 V_{DC}

Communication

Message Type	Cyclic data exchange
Module Name	CMC-PD01
GSD Document	DELA08DB.GSD
Company ID	08DB (HEX)
Serial Transmission Speed Supported (auto-detection)	9.6 Kbps; 19.2 Kbps; 93.75 Kbps; 187.5 Kbps; 125 Kbps; 250 Kbps; 500 Kbps; 1.5 Mbps; 3 Mbps; 6 Mbps; 12 Mbps (bits per second)

DeviceNet Card

▪ CMC-DN01

Features

- Based on the high-speed communication interface of Delta HSSP protocol, able to conduct immediate control of an AC motor drive
- Supports Group 2 only connection and polling I/O data exchange
- Supports max. 32 words input / 32 words output and remote I/O function for I/O mapping
- Node address and serial transmission speed can be set up on AC motor drive
- Power supplied from AC motor drive

DeviceNet Connector

Interface	5-Pin 5.08mm Pluggable Connector
Transmission Method	CAN
Transmission Cable	Shielded twisted pair cable (with 2 power cables)
Transmission Speed	125 Kbps, 250 Kbps, 500 Kbps and extendable serial transmission speed mode
Network Protocol	DeviceNet protocol

DeviceNet Connector

Interface	50-Pin communication terminal
Transmission Method	SPI communication
Terminal Function	1. Communicating with AC motor drive 2. Transmitting power supply from AC motor drive
Communication Protocol	Delta HSSP protocol

Delta Standard Fieldbus Cables

Delta Cables	Part Number	Description	Length
CANopen Cable	UC-CMC003-01A	CANopen cable, RJ45 connector	0.3 m
	UC-CMC005-01A	CANopen cable, RJ45 connector	0.5 m
	UC-CMC010-01A	CANopen cable, RJ45 connector	1 m
	UC-CMC015-01A	CANopen cable, RJ45 connector	1.5 m
	UC-CMC020-01A	CANopen cable, RJ45 connector	2 m
	UC-CMC030-01A	CANopen cable, RJ45 connector	3 m
	UC-CMC050-01A	CANopen cable, RJ45 connector	5 m
	UC-CMC100-01A	CANopen cable, RJ45 connector	10 m
	UC-CMC200-01A	CANopen cable, RJ45 connector	20 m
DeviceNet Cable	UC-DN01Z-01A	DeviceNet cable	305 m
	UC-DN01Z-02A	DeviceNet cable	305 m
EtherNet Cable	UC-EMC003-02A	EtherNet cable, Shielding	0.3 m
	UC-EMC005-02A	EtherNet cable, Shielding	0.5 m
	UC-EMC010-02A	EtherNet cable, Shielding	1 m
	UC-EMC020-02A	EtherNet cable, Shielding	2 m
	UC-EMC050-02A	EtherNet cable, Shielding	5 m
	UC-EMC100-02A	EtherNet cable, Shielding	10 m
	UC-EMC200-02A	EtherNet cable, Shielding	20 m
PROFIBUS Cable	UC-PF01Z-01A	PROFIBUS DP cable	305 m

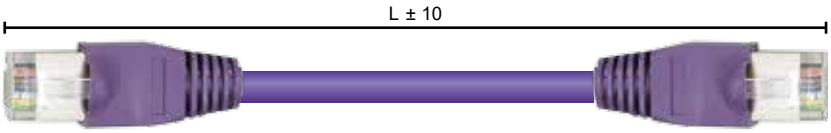

CANopen / DeviceNet TAP Breakout Boxes

Part Number	Description
TAP-CN01	1 in 2 out, built-in 121Ω terminal resistor
TAP-CN02	1 in 4 out, built-in 121Ω terminal resistor
TAP-CN03	1 in 4 out, RJ45 connector, built-in 121Ω terminal resistor

Unit: mm [inch]

66 [2.6]

TAP-CN01

87 [3.4]

TAP-CN02

66.50 [2.6]

TAP-CN03

Ordering Information

FRAME	Power Range	IP55 NEMA12 w/o Mains Switch	IP55 NEMA12 with Mains Switch	IP41 NEMA1
A	0.75	VFD007FP4EA-52	VFD007FP4EA-52S	VFD007FP4EA-41
	1.5	VFD015FP4EA-52	VFD015FP4EA-52S	VFD015FP4EA-41
	2.2	VFD022FP4EA-52	VFD022FP4EA-52S	VFD022FP4EA-41
	3.7	VFD037FP4EA-52	VFD037FP4EA-52S	VFD037FP4EA-41
	4	VFD040FP4EA-52	VFD040FP4EA-52S	VFD040FP4EA-41
	5.5	VFD055FP4EA-52	VFD055FP4EA-52S	VFD055FP4EA-41
	7.5	VFD075FP4EA-52	VFD075FP4EA-52S	VFD075FP4EA-41
B	11	VFD110FP4EA-52	VFD110FP4EA-52S	VFD110FP4EA-41
	15	VFD150FP4EA-52	VFD150FP4EA-52S	VFD150FP4EA-41
	18.5	VFD185FP4EA-52	VFD185FP4EA-52S	VFD185FP4EA-41
	22	VFD220FP4EA-52	VFD220FP4EA-52S	VFD220FP4EA-41
C	30	VFD300FP4EA-52	VFD300FP4EA-52S	VFD300FP4EA-41
	37	VFD370FP4EA-52	VFD370FP4EA-52S	VFD370FP4EA-41
D0	45	VFD450FP4EA-52	VFD450FP4EA-52S	VFD450FP4EA-41
	55	VFD550FP4EA-52	VFD550FP4EA-52S	VFD550FP4EA-41
D	75	VFD750FP4EA-52	VFD750FP4EA-52S	VFD750FP4EA-41
	90	VFD900FP4EA-52	VFD900FP4EA-52S	VFD900FP4EA-41

Model Name

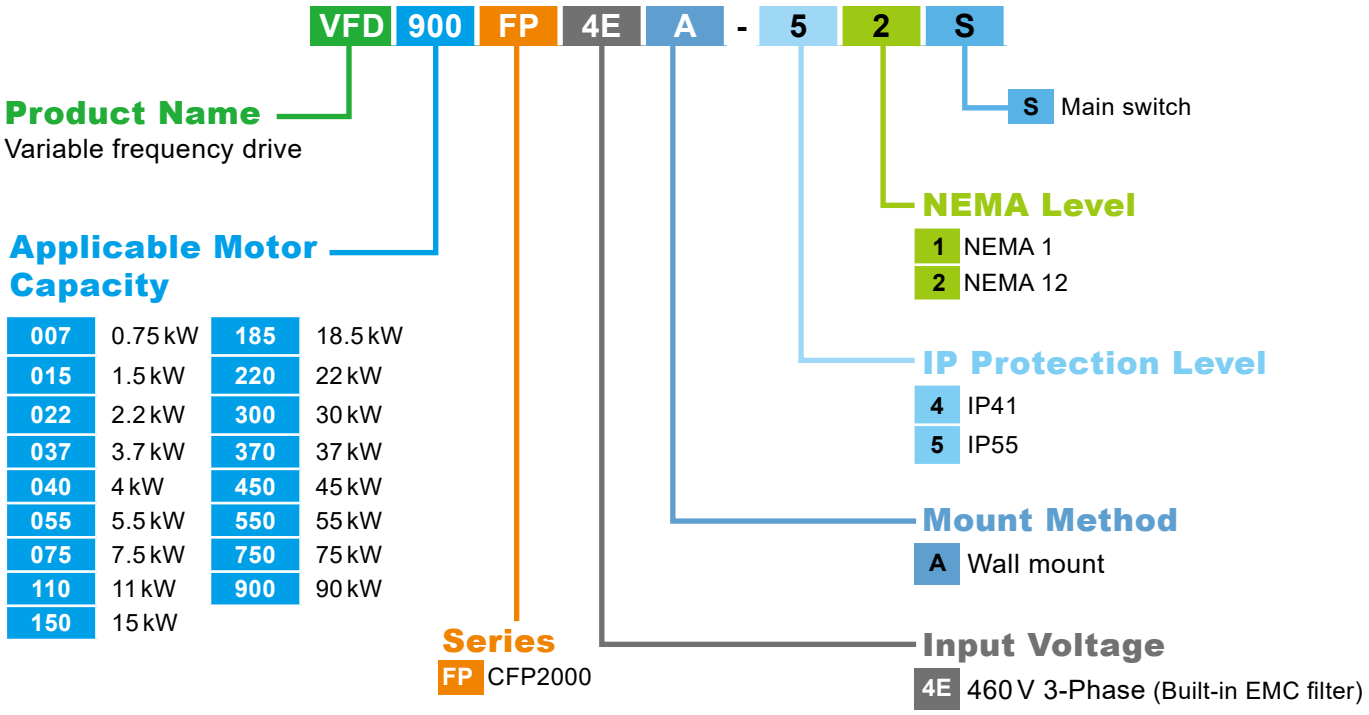

Global Operations

ASIA (Taiwan)

Taoyuan
Technology Center
(Green Building)

Taoyuan Plant 1

Tainan Plant
(Diamond-rated Green Building)

ASIA (China)

Wujiang Plant 3

Delta Electronics

ASIA (Japan)

Tokyo Office

ASIA (India)

Rudrapur Plant
(Green Building)

EUROPE

Amsterdam, Netherlands

AMERICA

Research Triangle Park

▲ Factories 5 ■ Branch Offices 102 ⊙ R&D Centers 6 ■ Distributors 824

Smarter. Greener. Together.

Industrial Automation Headquarters

Delta Electronics, Inc.
Taoyuan Technology Center
No.18, Xinglong Rd., Taoyuan District,
Taoyuan City 33068, Taiwan
TEL: 886-3-362-6301 / FAX: 886-3-371-6301

Asia

Delta Electronics (Shanghai) Co., Ltd.
No.182 Minyu Rd., Pudong Shanghai, P.R.C.
Post code : 201209
TEL: 86-21-6872-3988 / FAX: 86-21-6872-3996
Customer Service: 400-820-9595

Delta Electronics (Japan), Inc.
Tokyo Office
Industrial Automation Sales Department
2-1-14 Shibadaimon, Minato-ku
Tokyo, Japan 105-0012
TEL: 81-3-5733-1155 / FAX: 81-3-5733-1255

Delta Electronics (Korea), Inc.
Seoul Office
1511, 219, Gasan Digital 1-Ro., Geumcheon-gu,
Seoul, 08501 South Korea
TEL: 82-2-515-5305 / FAX: 82-2-515-5302

Delta Energy Systems (Singapore) Pte Ltd.
4 Kaki Bukit Avenue 1, #05-04, Singapore 417939
TEL: 65-6747-5155 / FAX: 65-6744-9228

Delta Electronics (India) Pvt. Ltd.
Plot No.43, Sector 35, HSIIDC Gurgaon,
PIN 122001, Haryana, India
TEL: 91-124-4874900 / FAX : 91-124-4874945

Delta Electronics (Thailand) PCL.
909 Soi 9, Moo 4, Bangpoo Industrial Estate (E.P.Z),
Pattana 1 Rd., T.Phraksa, A.Muang,
Samutprakarn 10280, Thailand
TEL: 66-2709-2800 / FAX : 662-709-2827

Delta Electronics (Australia) Pty Ltd.
Unit 20-21/45 Normanby Rd., Notting Hill Vic 3168, Australia
TEL: 61-3-9543-3720

Americas

Delta Electronics (Americas) Ltd.
Raleigh Office
P.O. Box 12173, 5101 Davis Drive,
Research Triangle Park, NC 27709, U.S.A.
TEL: 1-919-767-3813 / FAX: 1-919-767-3969

Delta Greentech (Brasil) S/A
São Paulo Office
Rua Itapeva, 26 – 3˚ Andar - Bela Vista
CEP: 01332-000 – São Paulo – SP - Brasil
TEL: 55-11-3530-8643 / 55-11-3530-8640

Delta Electronics International Mexico S.A. de C.V.
Mexico Office
Gustavo Baz No. 309 Edificio E PB 103
Colonia La Loma, CP 54060
Tlalnepantla, Estado de México
TEL: 52-55-3603-9200

EMEA

Headquarters: Delta Electronics (Netherlands) B.V.
Sales: Sales.IA.EMEA@deltaww.com
Marketing: Marketing.IA.EMEA@deltaww.com
Technical Support: iatechnicalsupport@deltaww.com
Customer Support: Customer-Support@deltaww.com
Service: Service.IA.emea@deltaww.com
TEL: +31(0)40 800 3900

BENELUX: Delta Electronics (Netherlands) B.V.
De Witbogt 20, 5652 AG Eindhoven, The Netherlands
Mail: Sales.IA.Benelux@deltaww.com
TEL: +31(0)40 800 3900

DACH: Delta Electronics (Netherlands) B.V.
Coesterweg 45, D-59494 Soest, Germany
Mail: Sales.IA.DACH@deltaww.com
TEL: +49(0)2921 987 0

France: Delta Electronics (France) S.A.
ZI du bois Challand 2, 15 rue des Pyrénées,
Lisses, 91090 Evry Cedex, France
Mail: Sales.IA.FR@deltaww.com
TEL: +33(0)1 69 77 82 60

Iberia: Delta Electronics Solutions (Spain) S.L.U
Ctra. De Villaverde a Vallecas, 265 1º Dcha Ed.
Hormigueras – P.I. de Vallecas 28031 Madrid
TEL: +34(0)91 223 74 20

Carrer Llacuna 166, 08018 Barcelona, Spain
Mail: Sales.IA.Iberia@deltaww.com

Italy: Delta Electronics (Italy) S.r.l.
Via Meda 2–22060 Novedrate(CO)
Piazza Grazioli 18 00186 Roma Italy
Mail: Sales.IA.Italy@deltaww.com
TEL: +39 039 8900365

Russia: Delta Energy System LLC
Vereyskaya Plaza II, office 112 Vereyskaya str.
17 121357 Moscow Russia
Mail: Sales.IA.RU@deltaww.com
TEL: +7 495 644 3240

Turkey: Delta Greentech Elektronik San. Ltd. Sti. (Turkey)
Şerifali Mah. Hendem Cad. Kule Sok. No:16-A
34775 Ümraniye – İstanbul
Mail: Sales.IA.Turkey@deltaww.com
TEL: + 90 216 499 9910

GCC: Delta Energy Systems AG (Dubai BR)
P.O. Box 185668, Gate 7, 3rd Floor, Hamarain Centre
Dubai, United Arab Emirates
Mail: Sales.IA.MEA@deltaww.com
TEL: +971(0)4 2690148

Egypt + North Africa: Delta Electronics
Unit 318, 3rd Floor, Trivium Business Complex, North 90 street,
New Cairo, Cairo, Egypt
Mail: Sales.IA.MEA@deltaww.com

*We reserve the right to change the information in this catalogue without prior notice.

DELTA_IA-MDS_CFP2000_C_EN_20191126